USB Current limiting Power Distribution Switch Chip CH217

Datasheet

Version: V1.1

https://wch-ic.com

1. Overview

CH217 is a USB port power switch chip with adjustable current limiting threshold. The chip has integrated modules for over-current protection, over-temperature protection, and under-voltage protection, and supports programmable currents of up to 2.7A at 5V, which can limit the output current to protect the power supply system in the event of a short circuit at the VOUT output. The following is the internal block diagram of CH217 for reference only.

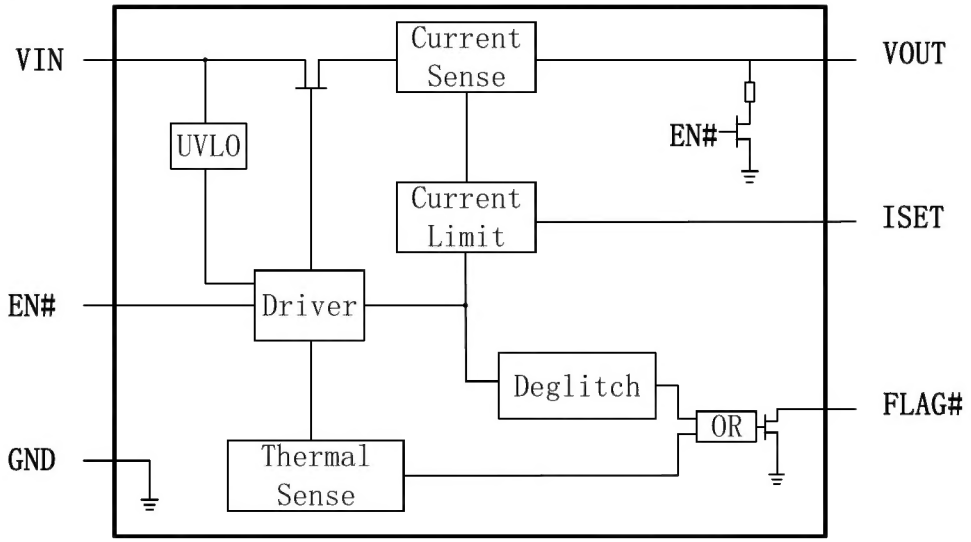

2. Feature

- Built-in power switching tube, typical 70mΩ on-resistance.
- The current limiting threshold can be adjusted by external resistors, supporting 400mA to 2.7A with ±10% typical error.
- Support power supply voltage 2.7V~5.5V.
- Fast current limiting protection in case of output short circuit.
- Low-power consumption, typical 50uA quiescent operating current.
- Typical shutdown current is less than 1uA, with no reverse current at shutdown.
- SOT23-6 package.

3. Package

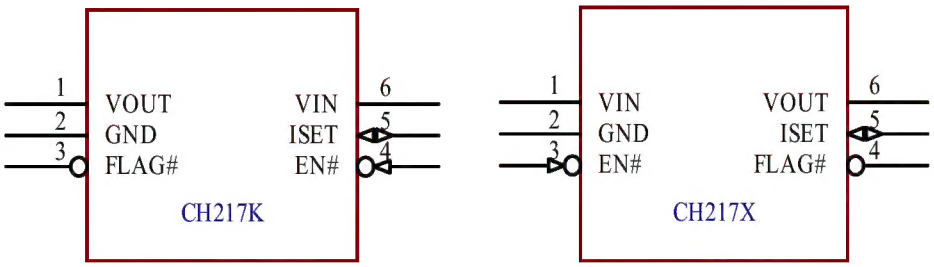

Package form	Shaping width		Pin spacing		Package description	Order model
SOT23-6	1.6mm	63mil	0.95mm	37mil	Small Outline Transistor	CH217K
SOT23-6	1.6mm	63mil	0.95mm	37mil	Small Outline Transistor	CH217X

4. Pin

CH217K Pin No.	CH217X Pin No.	Pin Name	Type	Pin Description
6	1	VIN	Power supply	Power input, external capacitor 10uF or more is recommended
1	6	VOUT	Power supply	Power output, usually connected to USB port VBUS
2	2	GND	Power supply	Common ground terminal
4	3	EN#	Input	Power switch enable input, active low, active high shutdown
3	4	FLAG#	Output	Over-current or over-temperature alarm open-drain output, active low
5	5	ISET	Analog	Current limiting threshold setting, external resistor Rset to GND to set Iset

5. Functional Module

5.1 Under-voltage Lockout Protection

When the VIN voltage is below the under-voltage lockout protection threshold Vuvlo, the switching tube will not be controlled by EN# and will always remain off. When the VIN voltage is above the under-voltage lockout protection threshold, the switching tube is allowed to be controlled and turned on when EN# is input low. The under-voltage lockout protection threshold has a hysteresis characteristic.

5.2 Over-temperature Protection

When the switch continuous conduction current is high or when over-current or short circuit occurs, the power consumption of the voltage difference between the two terminals of VIN and VOUT multiplied by the current will cause the chip internal temperature to rise. When the chip temperature exceeds the over-temperature protection threshold Tsd, the switch will be forcibly shut down and VOUT will have no output current. Later, after the chip cools down, the switch will be allowed to turn on again. If the chip is over-temperature after a period of time, it will be turned off again.

5.3 Switch Control

When EN# is input low and VIN is higher than Vuvlo, the switching tube between VIN and VOUT turns on, i.e. the power switch turns on.

When EN# is input high, or VIN is lower than Vuvlo, the switching tube between VIN and VOUT is turned off, i.e. shutdown, and the discharge tube at VOUT is turned on to accelerate the discharge of VOUT capacitor.

5.4 Current Limiting and Over-current Protection

When the VOUT output current Iout exceeds the current limiting threshold Iset, the over-current protection module automatically reduces the conduction degree of the power switching tube, making the conduction

resistance increase and the VOUT voltage drop, thus limiting the output current and entering the constant current state. The constant current value is positively related to the VOUT voltage value. When VOUT is short-circuited to GND, the VOUT voltage is the smallest and the corresponding constant current value is the smallest, i.e. the short-circuit current Ishort.

In the ISET pin external resistor Rset to GND can set the current limiting threshold Iset, Iset = 60K / Rset, Rset is not less than 22K.

6. Parameters

6.1 Absolute Maximum Value (critical or exceeding the absolute maximum value will probably cause the chip to work improperly or even be damaged)

Name	Parameter Description	Minimum value	Maximum value	Unit
TA	Ambient temperature at work	-40	85	℃
TS	Ambient temperature during storage	-55	150	℃
VIN	Supply Voltage	-0.4	6	V
VOUT	Output Voltage	-0.4	VIN	V
VIO	Voltage on EN# or FLAG# pins	-0.4	5.5	V
PD	Maximum power consumption of the whole chip		500	mW
θ_{JA}	SOT23-6 package thermal resistance	220		℃/W

6.2 Electrical Parameters (Test conditions: TA=25℃, VIN=5V, Rset=30KΩ)

Name	Parameter Description		Minimum value	Typical values	Maximum value	Unit
VIN	Supply Voltage		2.7	5.0	5.5	V
Iq	Quiescent operating current	EN#=low level	25	50	80	uA
Isd	Shutdown current	EN#=high level	0	0.1	3	uA
VIL	EN# pin low input voltage		0		0.7	V
VIH	EN# pin high input voltage		1.8		5	V
VOL	FLAG# pin low output voltage	Inhale 2mA current		0.2	0.4	V
Ron	Power switching tube on-resistance	Iout=500mA	40	70	110	mΩ
Iset	Current limiting threshold	Rset=30K	1.7	2.0	2.3	A
Ishort	VOUT short-circuit current to ground	Rset=30K	1.0	1.2	1.4	A
Vuvlo	Under-voltage lockout voltage (with hysteresis characteristics)	VIN rising stage	1.8	2.2	2.7	V
		VIN falling stage	1.6	2.0	2.4	V
Tsd	Over-temperature protection threshold (with hysteresis characteristics)	Rising stage		155		℃
		Falling stage		135		℃
Tdly	Valid from fault detection to FLAG# pin output			8		mS

7. Typical Characteristics Diagram (TA=25℃, VIN=5V, Rset=22KΩ, unless otherwise specified)

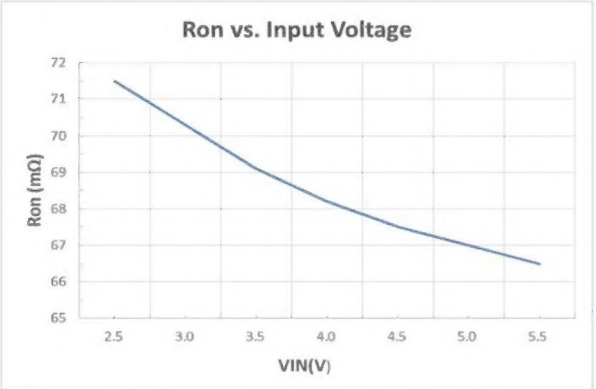

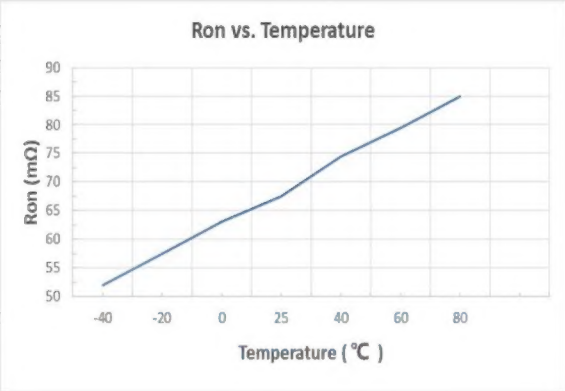

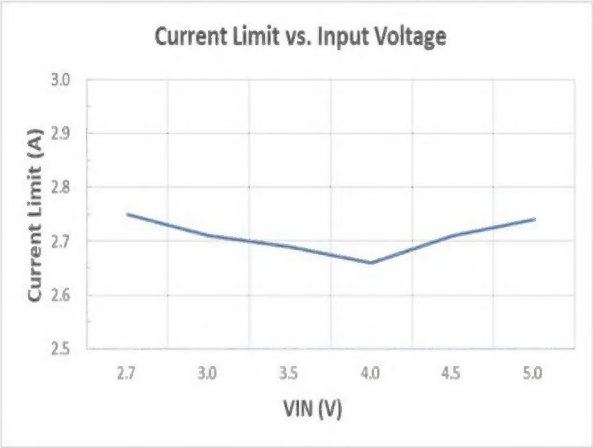

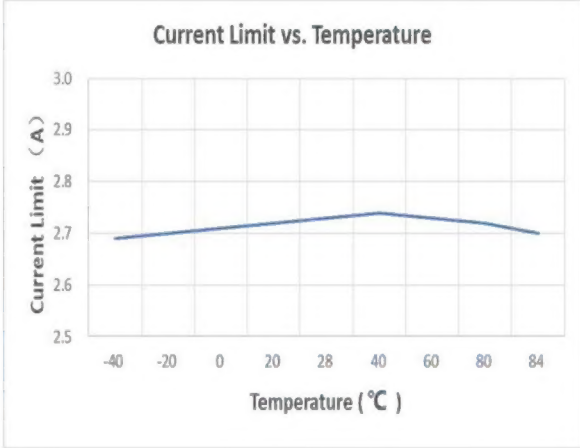

8. Application

The CH217 can be used for power control of computers, USB hosts, USB HUB, chargers, and other ports.

The following figure shows the application of independent power distribution control for each port of the HUB. The EN# pin is controlled by the PWREN# signal of the HUB chip CH335 or CH334, and the FLAG# pin can generate an over-current or over-temperature alarm signal to notify the HUB controller and the computer, and the CH334/5 has built-in pull-up resistors.

In the figure, Rset is 56K and the current limiting threshold is set to about 1A, which should actually be selected according to the power supply capability to achieve the protection effect.

Capacitor C8 selects the capacity as needed, with typical values of C4/C5/C6/C7 available at 150uF.

The actual operating current carrying capacity needs to be considered when designing the PCB, VIN (+5V) and VOUT (VBUS*) alignment path of the PCB as wide as possible, if there is an over-hole is recommended more than one, at least two or more in parallel.

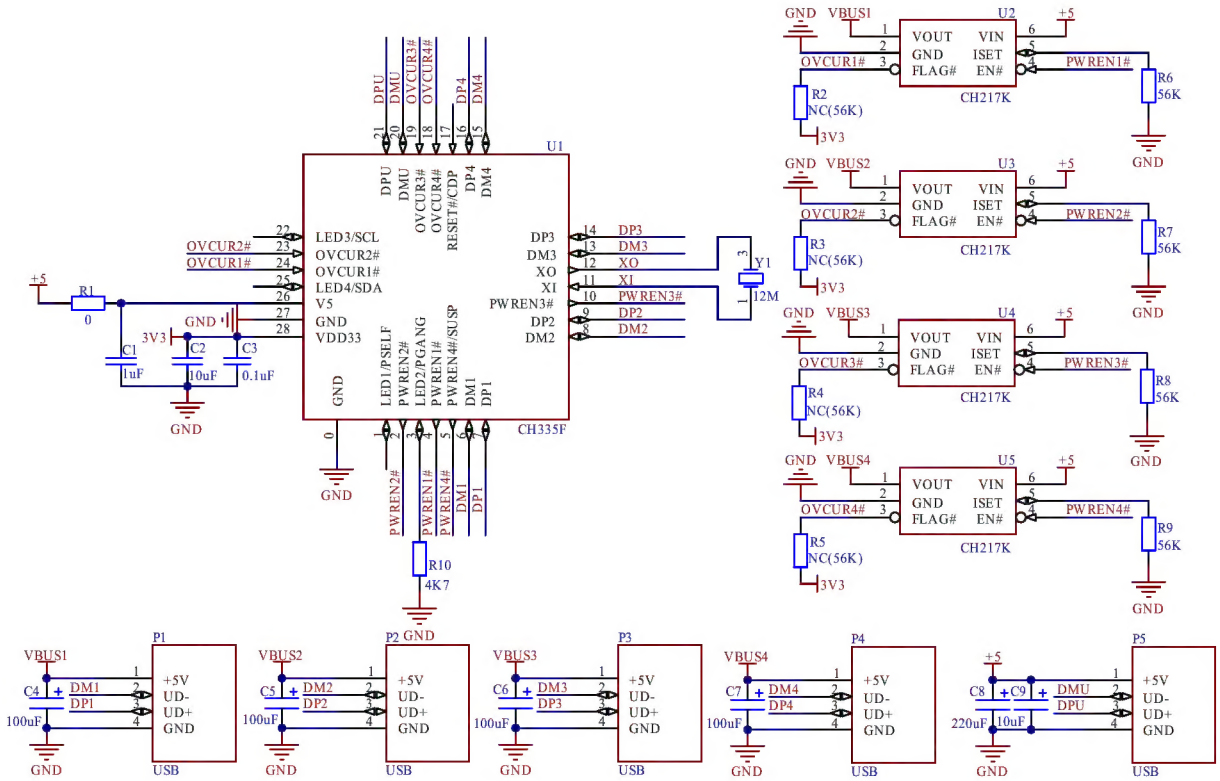

9. Package

9.1 SOT23-6
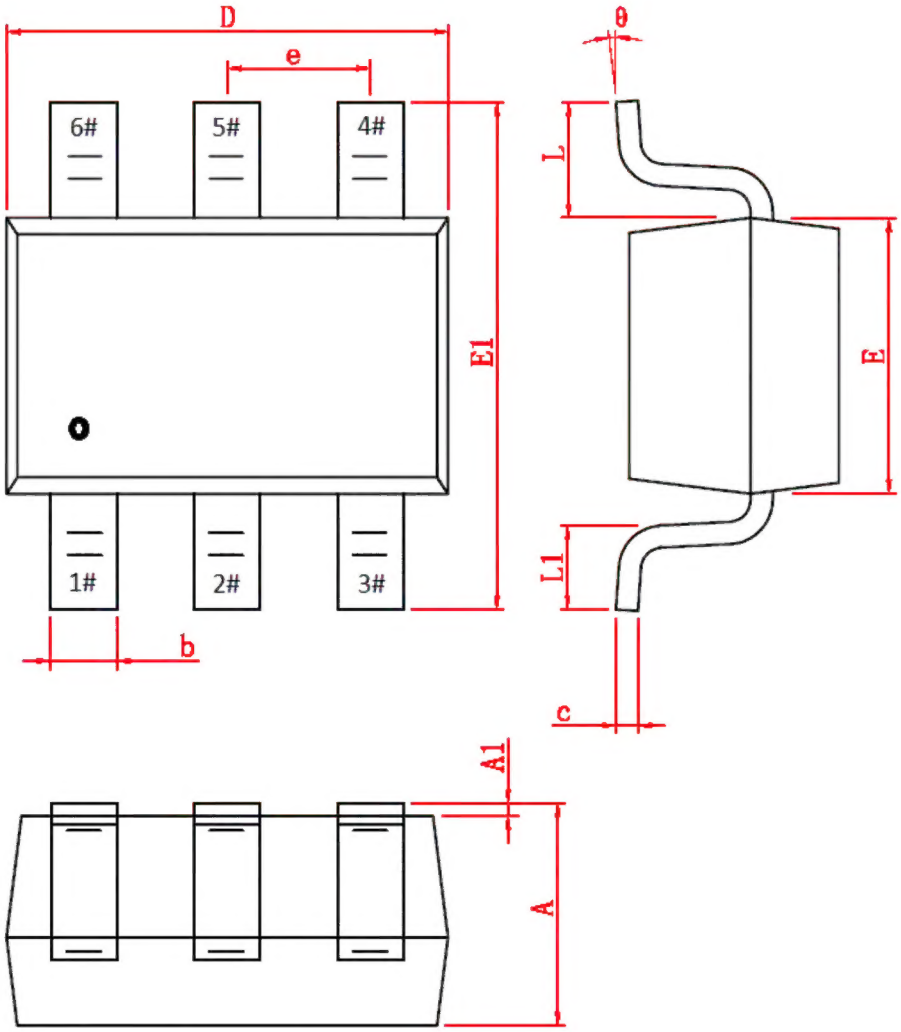
Symbols	Metric in mm		
	Min	Type	Max
A	1.05	1.15	1.4
A1	0.0	0.07	0.15
b	0.3	0.4	0.5
c	0.1	0.16	0.22
D	2.7	2.9	3.1
E	1.4	1.6	1.8
E1	2.6	2.8	3.0
e		0.95	
L		0.6	
L1	0.25	0.4	0.55
θ	0°		8°